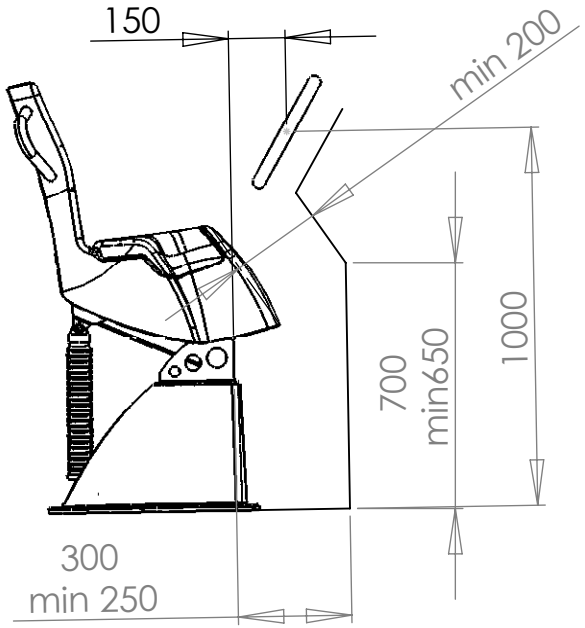

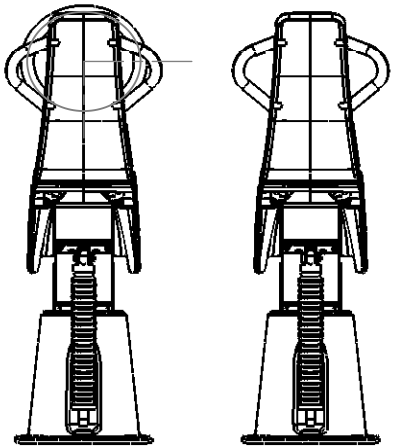

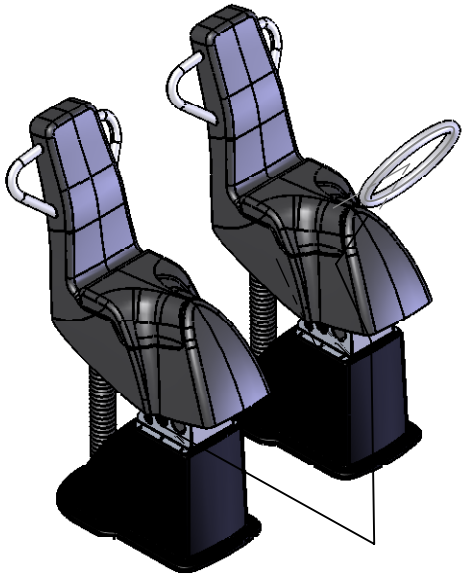

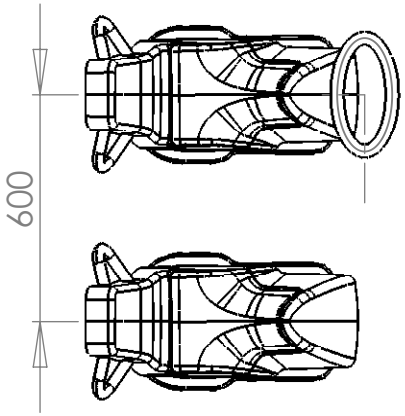

UNLESS OTHERWISE SPECIFIED: DIMENSIONS ARE IN MILLIMETERS SURFACE FINISH: TOLERANCES: LINEAR: ANGULAR:	FINISH:			DEBUR AND BREAK SHARP EDGES	DO NOT SCALE DRAWING	REVISION
	NAME	SIGNATURE	DATE		Ullman Dynamics AB Tel +46 31 708 26 00 henrik.andersson@ullmans.com	
DRAWN	Henrik A				TITLE:	
CHK'D					Cockpit twin 750	
APPV'D						
MFG						
Q.A				MATERIAL:	DWG NO.	A4
					Ullman cockpit dimension	
				WEIGHT:	SCALE:1:20	SHEET 1 OF 1